222/28 MHz TRANSVERTER BOARD

With this Transverter board you can work on **1.25 meter** band using any type of the HF radio that has **10 meter** band. It would work the whole 1.25 meter band at **222 to 225 mhz** if your base radio has the **28 to 31 mhz** band. **It works any modes such SSB, CW or FM if its available in your radio.**

Technical specifications

- RF range - **222 ... 225 MHz**
- IF range - **28 ... 31 MHz**
- IF input power - **1 ... 50 mW (0.05 W max.)** or **0 ... 17 dBm**
- LO frequency - **194 MHz**
- Output power - **6 ... 8 W**
- RX gain - **typ. 20 dB**
- Noise figure - **typ. 1.0 dB**
- Image rejection - **typ. 70 dB**
- PTT control - **Contact closure to ground**
- Supply voltage - **+13.8 V DC (+12 ... 14 V DC)**
- Current consumption - **typ. 1.3 A (TX)**

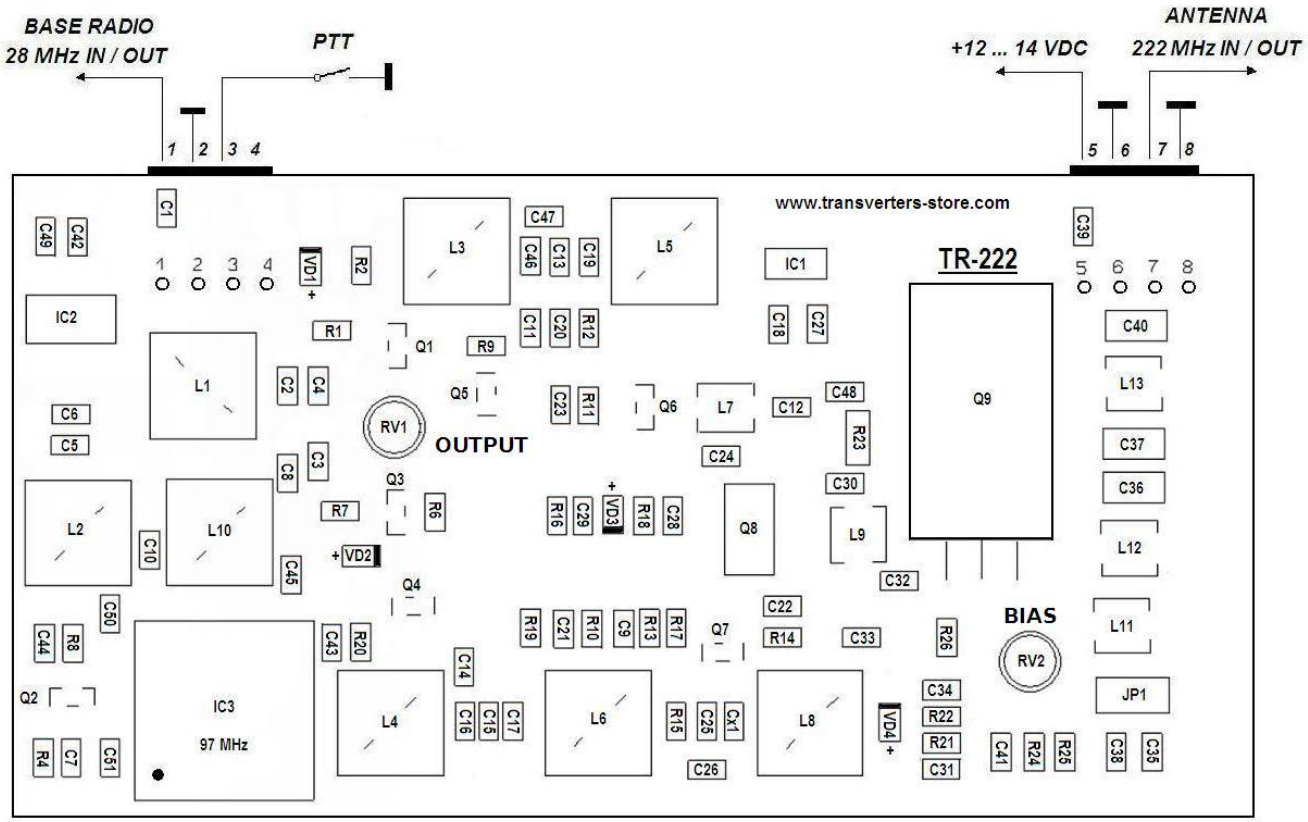

Pinout of the connectors:

1. IF 28 MHz transverter input – output line
2. Ground
3. PTT line **(ground it to switch Transverter to the TX mode)**
4. Control point (we use it to adjust the board)
5. +12 V
6. Ground
7. Antenna 222 MHz
8. Ground

<u>To read the tips below and mount your transverter EXACTLY as described.</u>

1. **RF input** power to the transverter from your HF radio should be **NO MORE** than **50 mWt** (**0.05 watts max**). You can adjust it using **RV1** pot on the board.
2. DC supply is **+12 ... 14 V**
3. To get the transverter switched to the **TX** mode close the **PTT line to the ground.**
4. **RV1** pot adjusts **OUTPUT POWER** of the Transverter.
5. **RV2** pot adjusts **BIAS** of the output transistor.

The transverter board SHOULD BE MOUNTED onto the heat sink.
Using the metal bolts screw down the transistor onto the heat sink and then put a few nuts or washers under both mounting holes between the board and the heat sink so to get the board flat mounted above the heat sink about a few millimetres. Or you can just use the pieces of plastic between the board and heatsink under mounting holes drilling the holes in and get the bolts through. Both mounting bolts should have a good contact to the transverter board ground.
The stable work of the transverter depends of this!

The output transistor should be mounted onto the heat sink without insulation.
To check mutual GROUND of the output transistor, heat sink and board.
All RF RX and TX lines should be done with the coax cable !

<u>BE CAREFUL !</u>
Applying more than 0.1 W from your radio to the transverter board you instantlly get the transverter board killed.

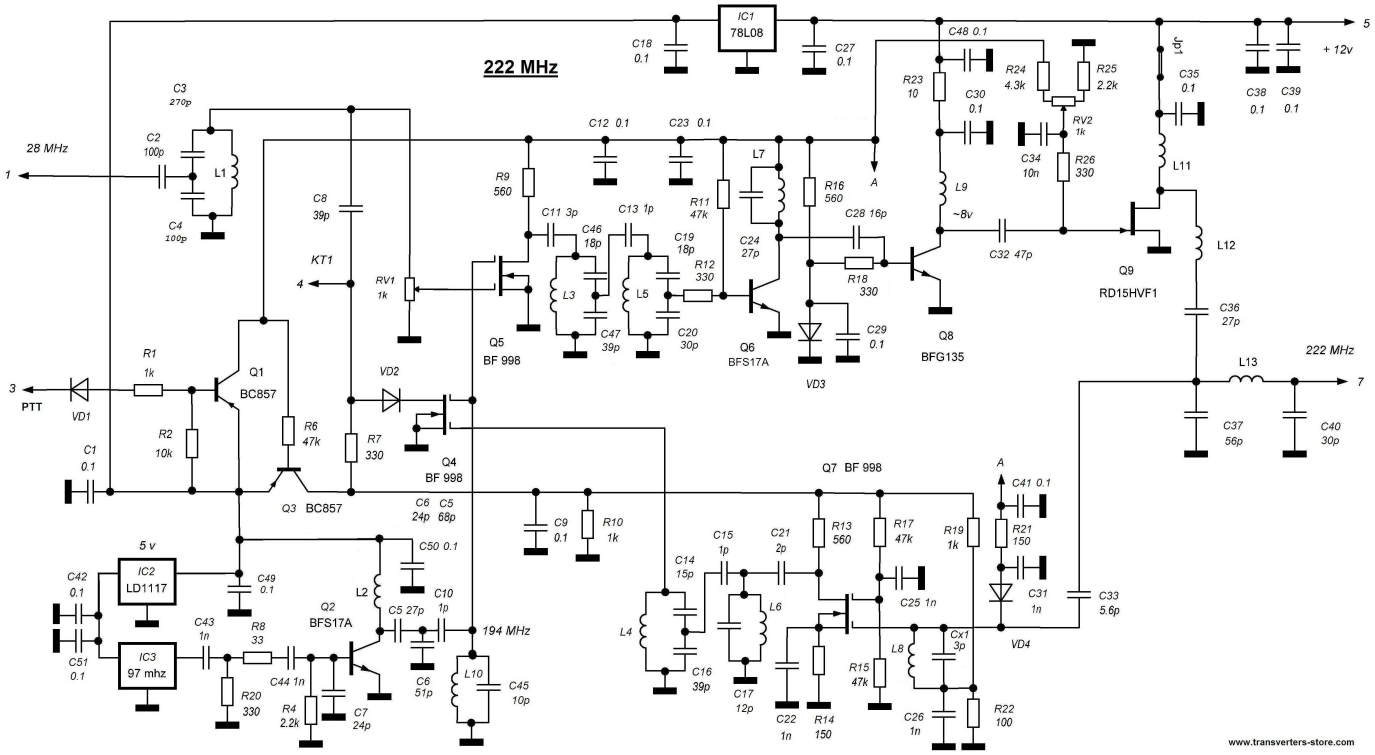

Web Store: **http://transverters-store.com/**
E-mail: **ut5jcw@usa.com**
Skype: **ut5jcw**